CBCS SCHEME

USN | | | | | | | | | |

BEE703

Seventh Semester B.E./B.Tech. Degree Examination, Dec.2025/Jan.2026
Power System Analysis – II

Time: 3 hrs. Max. Marks: 100

Note: 1. Answer any FIVE full questions, choosing ONE full question from each module.
2. M : Marks , L: Bloom's level , C: Course outcomes.

		Module – 1	M	L	C
Q.1	a.	Explain with an example : i) Oriented graph ii) Basic cutsets iii) Basic loops.	6	L2	CO1
	b.	For the network shown in Fig.Q.1(b) below, draw the graph and mark a tree. How many trees will this graph have? Mark the basic cut sets and basic loops. 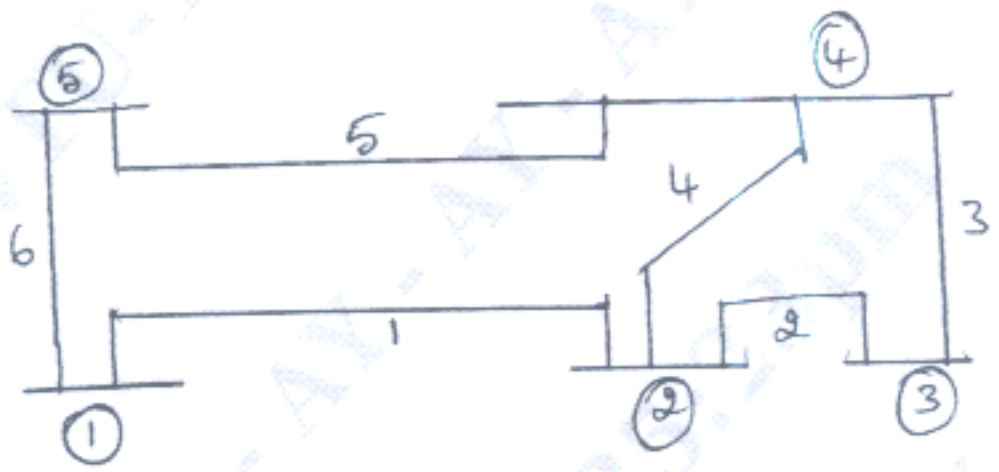 Fig Q1(b)	8	L3	CO1
	c.	Explain with an example, primitive networks in i) Impedance form ii) Admittance form.	6	L2	CO1
		OR			
Q.2	a.	For the networks shown in Fig Q2(a) form the bus incidence matrix A, branch path incidence matrix K and loop incidence metric C 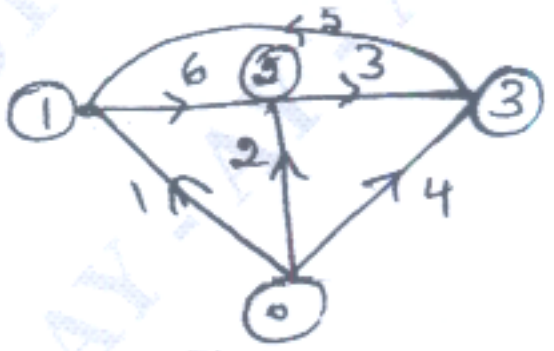 Fig Q2(a)	6	L2	CO1
	b.	Derive an expression for bus admittance matrix (Y_{Bus}) using singular transformation method.	8	L2	CO1

	c.	For the system shown in Fig.Q.2(c), obtain Y_{Bus} by inspection method. Take Bus ① as reference. The impedance marked are in P.U. 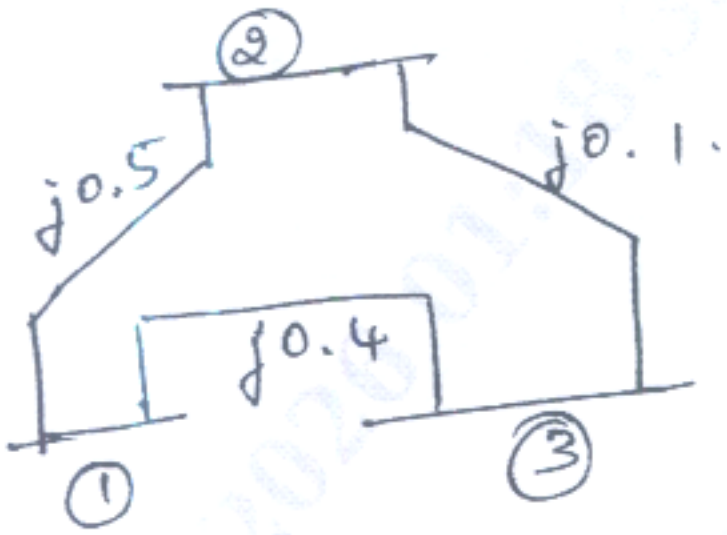 Fig.Q.2(c)	6	L3	CO1
		Module – 2			
Q.3	a.	Explain the importance of load flow studies in power system analysis.	6	L2	CO2
	b.	Derive the Static Load Flow Equations (SLFE) (in polar form).	8	L2	CO2
	c.	Explain with suitable algorithmatic steps involved in, Gauss-Seidal iterative Method for load flow solution (GSLF method).	6	L2	CO2
		OR			
Q.4	a.	What are the constraints to be considered for a load flow solution?	5	L2	CO2
	b.	Classify the Buses in power system for conduction of load flow solution.	5	L2	CO2
	c.	For the power system shown in Fig Q4(c), all buses except slack bus are PQ buses. Calculate the voltages at the end of 1st iteration using Gauss Seidal Load Flow (GSLF) method. 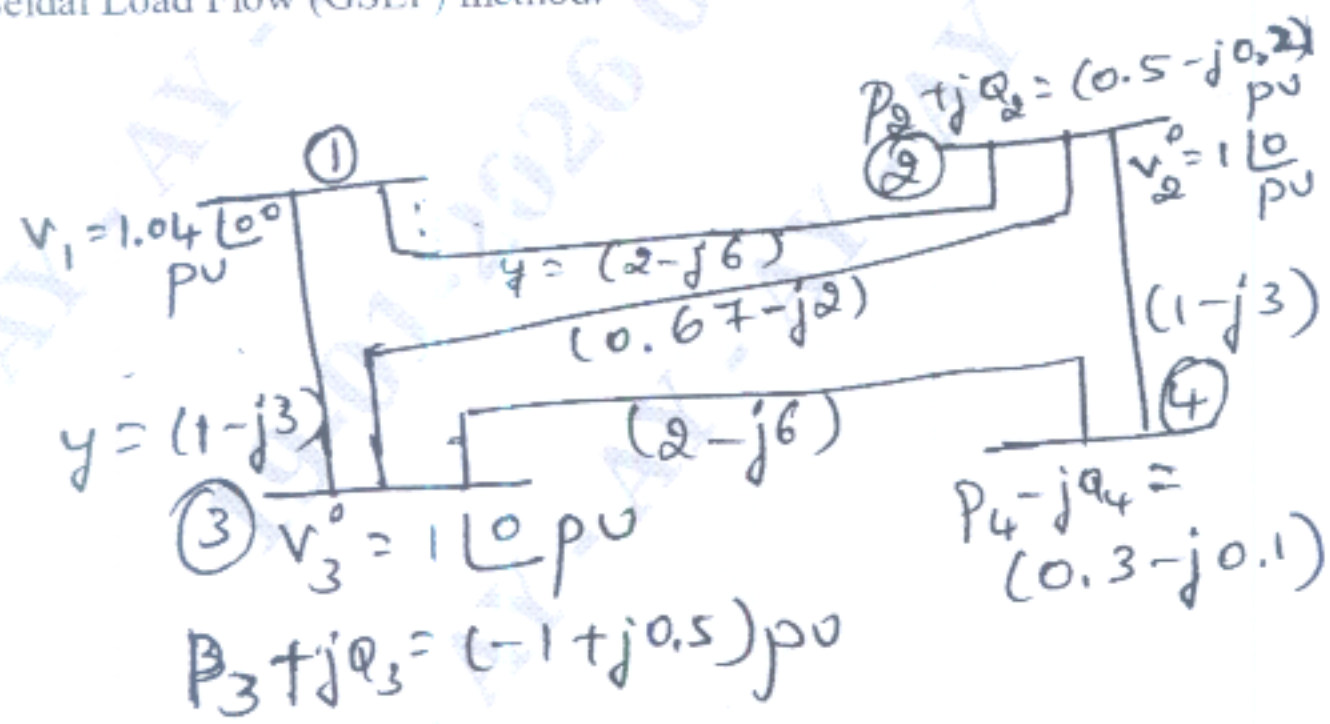 Fig.Q.4(c)	10	L3	CO2
		Module – 3			
Q.5	a.	Explain with a flowchart Newton Raphson Load Flow (NRLF) method to solve load flow problem (in polar form)	10	L2	CO3

	b.	A sample 3 Bus systems has slack Bus, PQ Bus, PV Bus (one each), write the structural form power system Jacobian matrix (J) with necessary equations to calculate its elements.	10	L3	CO3
		OR			
Q.6	a.	Explain in brief the important assumptions made in arriving at Fast Decoupled Load Flow Method (FDLF) from NRLF method.	10	L2	CO3
	b.	Explain with a flowchart FDLF method (in polar form).	10	L2	CO3
		Module – 4			
Q.7	a.	Write a brief note on the performance curves of a thermal power station for economic load dispatch studies.	6	L2	CO4
	b.	Derive the expression for economic dispatch with transmission losses neglected.	6	L2	CO4
	c.	A power plant consisting of two units $IC_1 = 40 + 0.2P_1$ and $IC_2 = 30 + 0.25P_2$. Find the total yearly saving in fuel cost in rupees, for optimal scheduling of a load of 130 mW as compared to equal distribution of same load between them.	8	L2	CO4
		OR			
Q.8	a.	Derive an expression for condition for economic load dispatch including transmission loss (B-coefficient)	8	L2	CO4
	b.	What is Unit Commitment? What are the constraints to be considered in unit commitment? Explain in brief.	4	L2	CO4
	c.	Explain the algorithm steps in dynamic programming approach to solve unit commitment problem.	8	L2	CO4
		Module – 5			
Q.9	a.	Explain with necessary equations the Z_{Bus} formulation under the following modification – Type 1, Type 2, Type 3, Type 4 (without mutual couplings).	10	L2	CO5
	b.	Consider the system in Fig.Q.9(b) obtain Z_{Bus} by using Building algorithm. 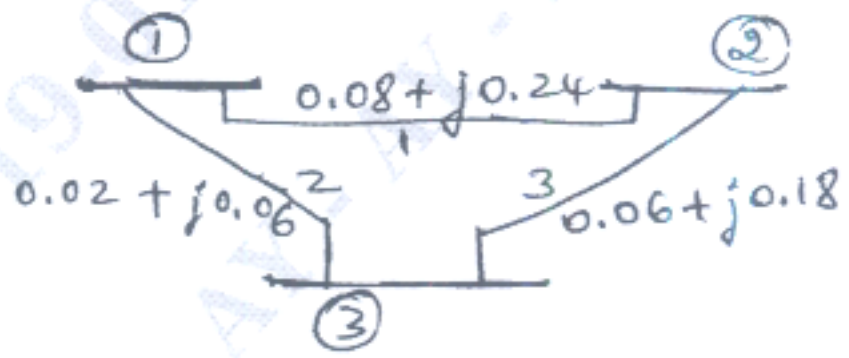 Fig.Q.9(b)	10	L3	CO5
		OR			
Q.10	a.	Derive the swing equation for conducting power system stability studies.	10	L2	CO5
	b.	Write an explanatory note on methods employed for numerical solution of swing equation i) Point by point method ii) R. K method	10	L2	CO5

* * * * *