ACHARYA INSTITUTE OF TECHNOLOGY
Library
Date.....
BANGALORE

USN | | | | | | | | | |

18ME36A/18MEA306/18MA36

Third Semester B.E. Degree Examination, January 2020

COMPUTER AIDED MACHINE DRAWING

Time: 3 Hours | Max. Marks: 100

Note:
1. Answer any one question from each of the parts A,B,C
2. Use **FIRST ANGLE** projection only.
3. Missing data if any may suitable be assumed
4. All the calculations should be on answer sheet supplied
5. All the dimensions are in mm
6. **Part C Assembled View should be in 3D and the other 2 views in 2D**

PART-A

Q. No. 1 Draw the front view looking in the direction F, left view and top view of the object shown in figure **(25 Marks)**

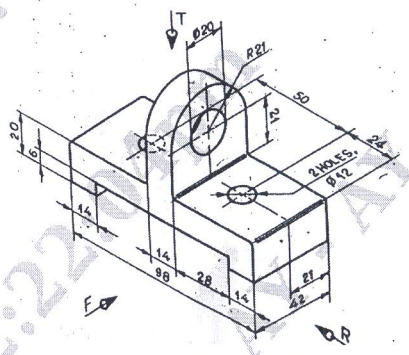

Q. No. 2 Draw the views of square headed bolt with nut for size 30 mm diameters. **(25 Marks)**

PART-B

Q. No. 3 Draw two views of spigot and socket cotter joint of diameter of shaft 25 mm. **(25 Marks)**

Q. No. 4 Draw two views of a universal coupling of diameter of shaft of 25 mm. **(25 Marks)**

PART-C

Q. No. 5 Figure: 1 Shows the details of "Machine Vice". Assemble the parts and draw the following: a) Sectional front view b) Top view **(50 Marks)**

Q. No. 6 Figure: 2 Shows the details of "I.C. Engine Connecting Rod" Assemble the parts and draw the following: a) Sectional front view b) Top view **(50 Marks)**

VTU-16-01-2020 02:17:53pm AY - AY - AY - AY - AY

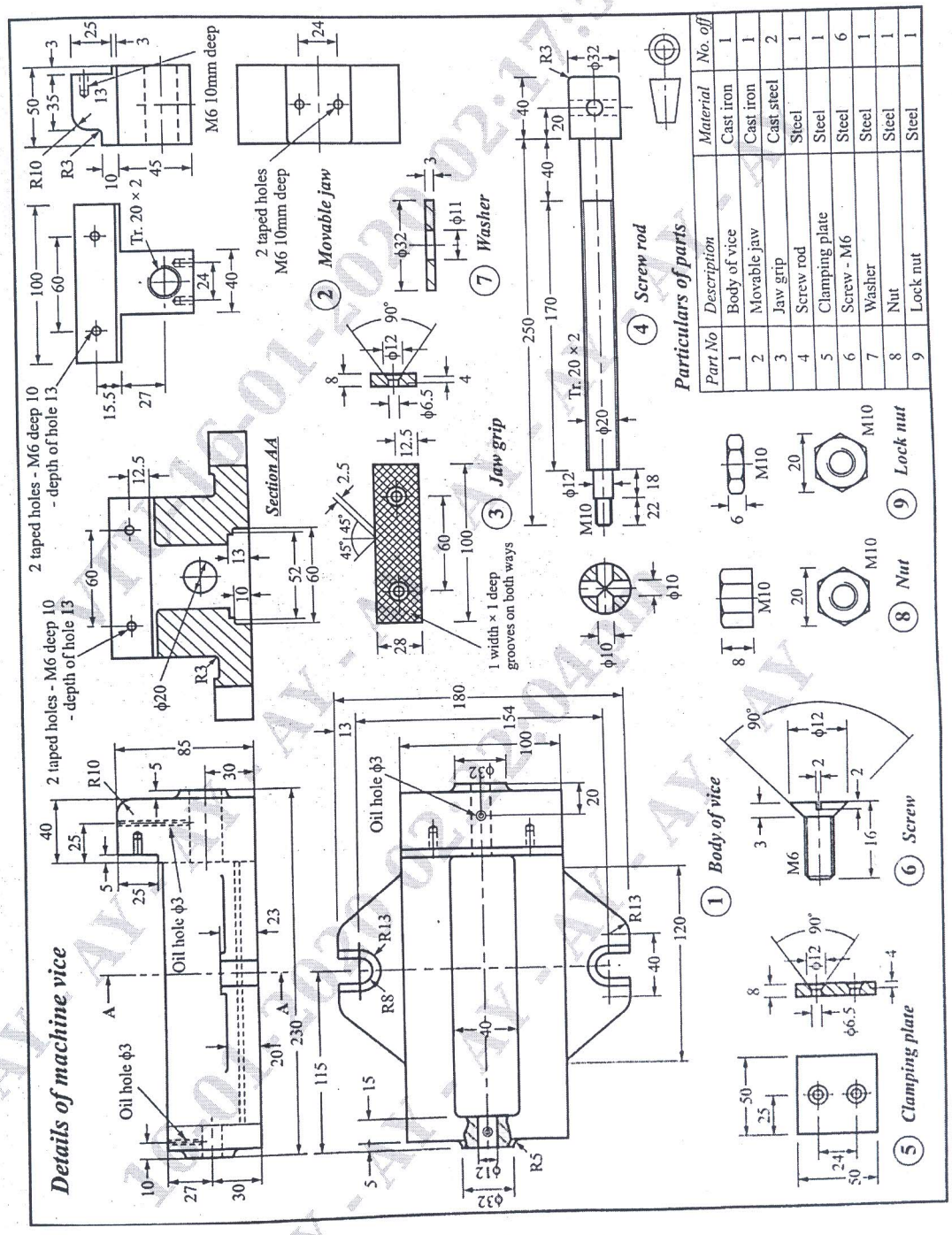

Figure 1: Details of Machine Vice

AY - AY - AY -

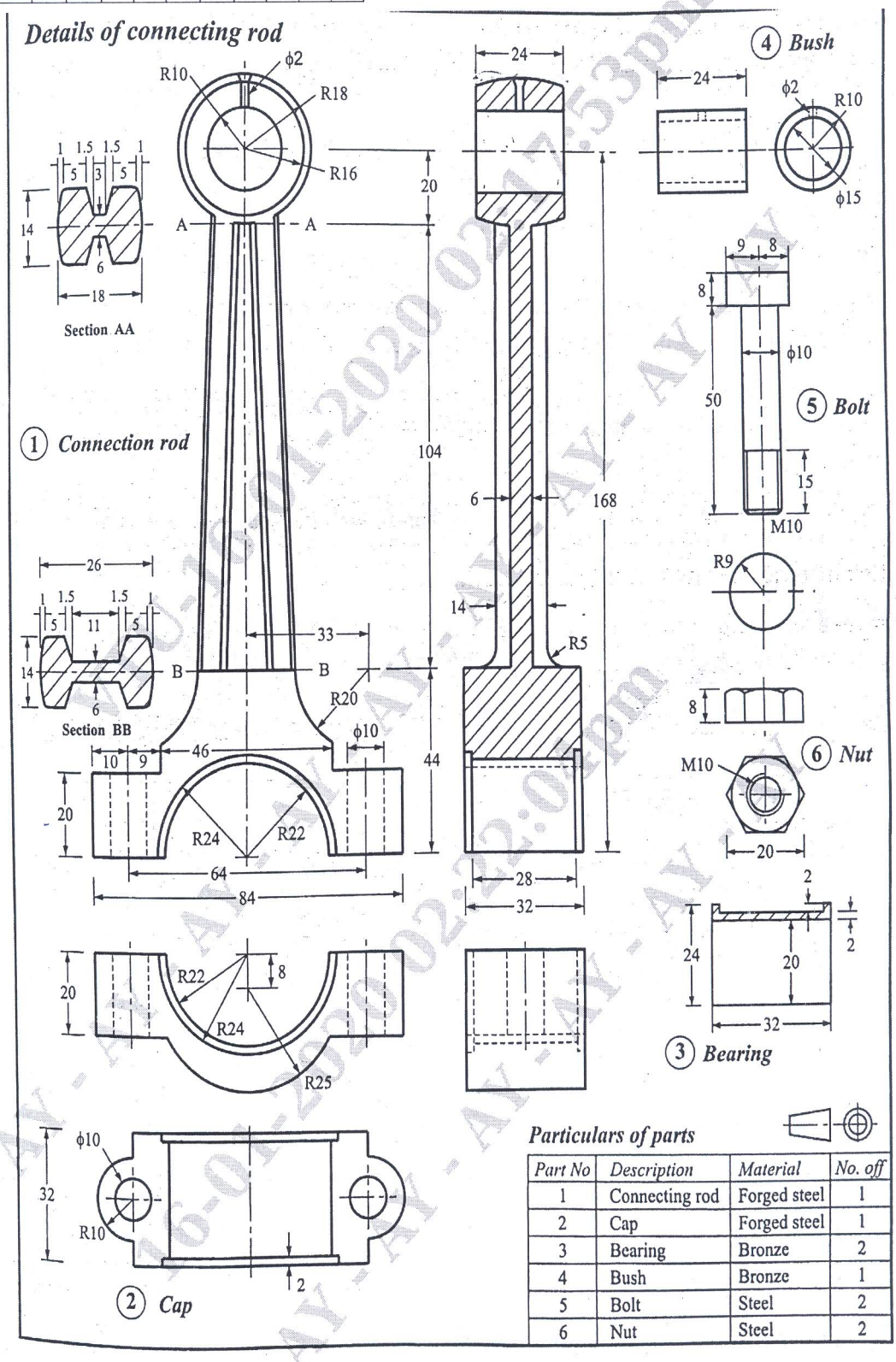

Particulars of parts

Part No	*Description*	*Material*	*No. off*
1	Connecting rod	Forged steel	1
2	Cap	Forged steel	1
3	Bearing	Bronze	2
4	Bush	Bronze	1
5	Bolt	Steel	2
6	Nut	Steel	2

Figure 2: Details of I.C. Engine Connecting Rod

AY - AY - AY -